Forked Deer
Electric Cooperative Inc.
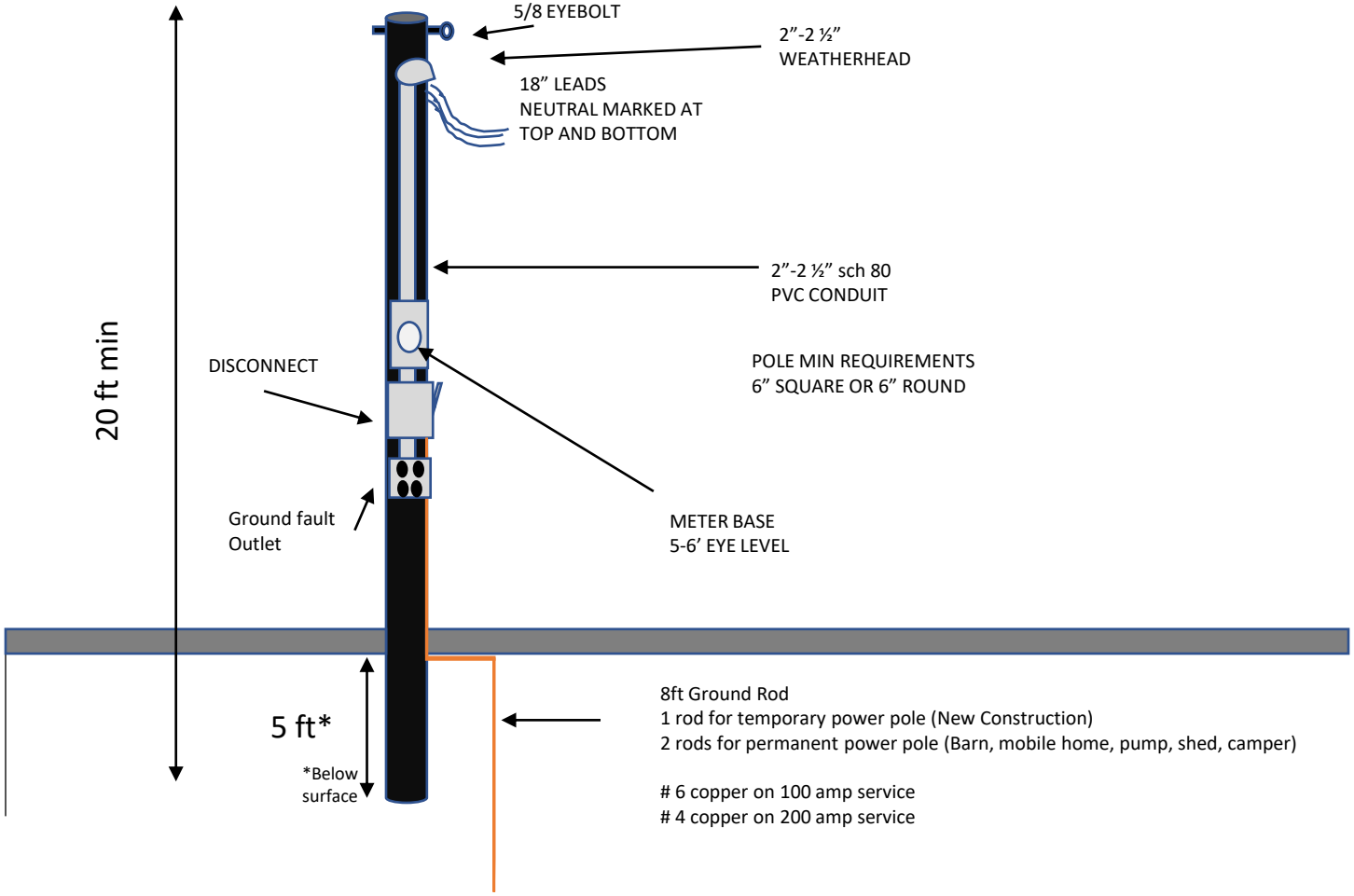
ASSEMBLY GUIDE FOR SERVICE POLE INSTALLATION